Rochester Bridge Trust
Learning about Bridges

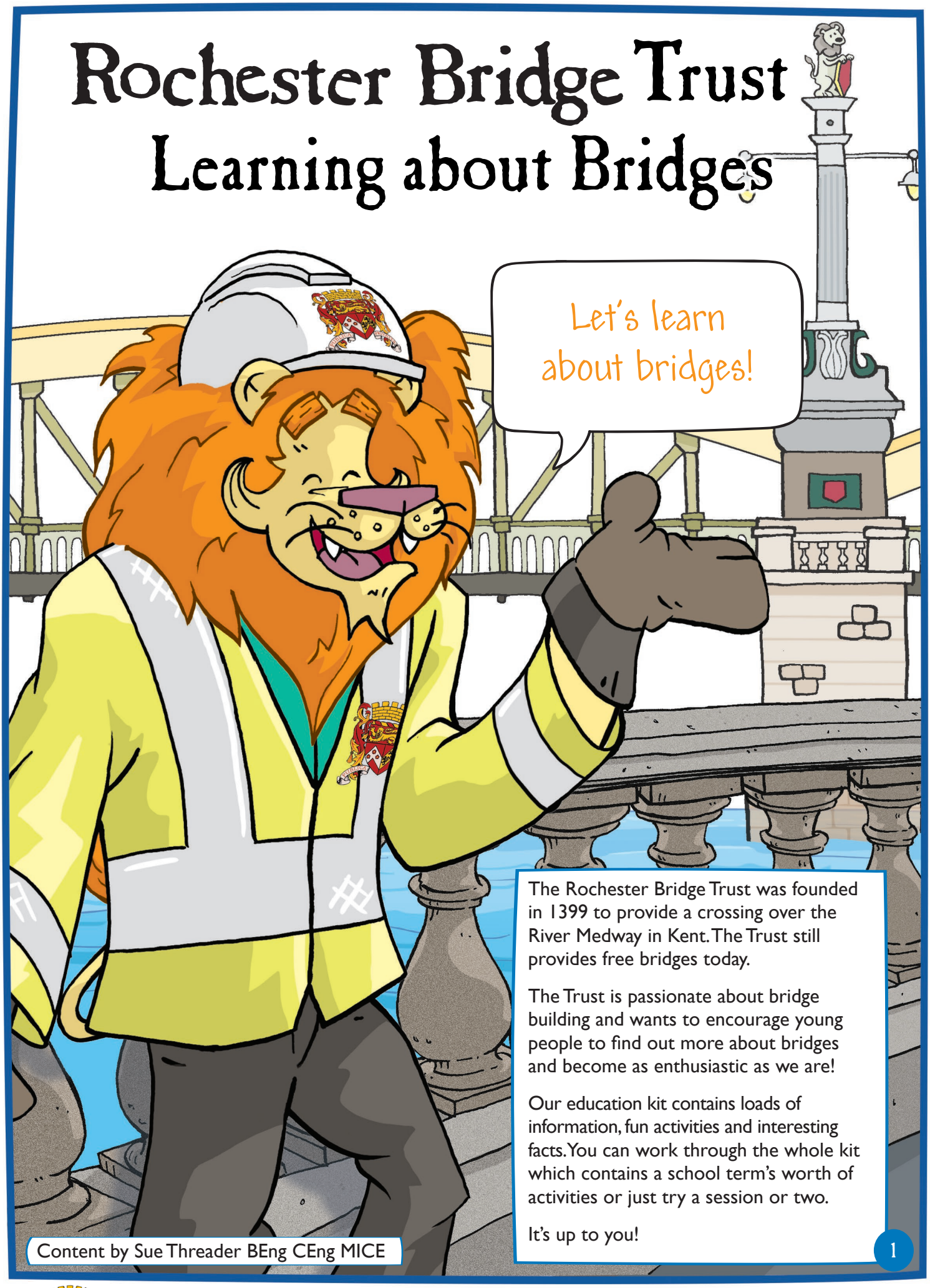

The Rochester Bridge Trust was founded in 1399 to provide a crossing over the River Medway in Kent. The Trust still provides free bridges today.

The Trust is passionate about bridge building and wants to encourage young people to find out more about bridges and become as enthusiastic as we are!

Our education kit contains loads of information, fun activities and interesting facts. You can work through the whole kit which contains a school term's worth of activities or just try a session or two.

It's up to you!

Content by Sue Threader BEng CEng MICE

About the Rochester Bridge Trust

The first bridge at Rochester was built by the Romans soon after the invasion of Britain in AD43. Once the Romans left, their bridge was maintained by the local people of Kent until the 14th century. In 1381, the River Medway froze solid and, when the thaw came, the ice and floodwater swept away the Roman Bridge.

Two benefactors built a new stone bridge one hundred yards upstream which was opened in September 1391. Their names were Sir John de Cobham and Sir Robert Knolles. Together the benefactors also persuaded their friends and acquaintances to make donations of land and money for the perpetual maintenance of Rochester Bridge. In 1399, King Richard II granted letters patent which allowed the Rochester Bridge Trust to be set up to care for the bridge and its property. Two Wardens were appointed to manage the bridge.

For the next 457 years, the Wardens looked after the medieval bridge. Major improvements were carried out by the civil engineer, Thomas Telford, in 1827. However the increase in road and rail traffic as a result of the industrial revolution meant the stone bridge's days were numbered.

In 1856, the Trust completed a new cast-iron arch bridge on the line of the original Roman Bridge. It was designed by Sir William Cubitt who had been the civil engineer for the Crystal Palace built for the Great Exhibition in 1851. The old medieval bridge was then blown up for the Wardens by the Royal Engineers using gunpowder.

The Victorian Bridge was reconstructed in 1914 as a bowstring truss and is today known as the Old Bridge. A second road bridge, the New Bridge was opened to traffic in 1970. Between the two road bridges there is the Service Bridge which carries pipes and cables across the river.

The Rochester Bridge Trust is a registered charity and still owns and maintains the two road bridges and the Service Bridge free of charge to the public. The Trust's money is derived from the land and money given by the benefactors in the 14th and 15th Centuries. It receives no public money, does not charge tolls and does not raise funds. With any surplus funds, the Trust supports other charitable projects, primarily the preservation of historic buildings and education projects in the field of engineering, particularly civil engineering.

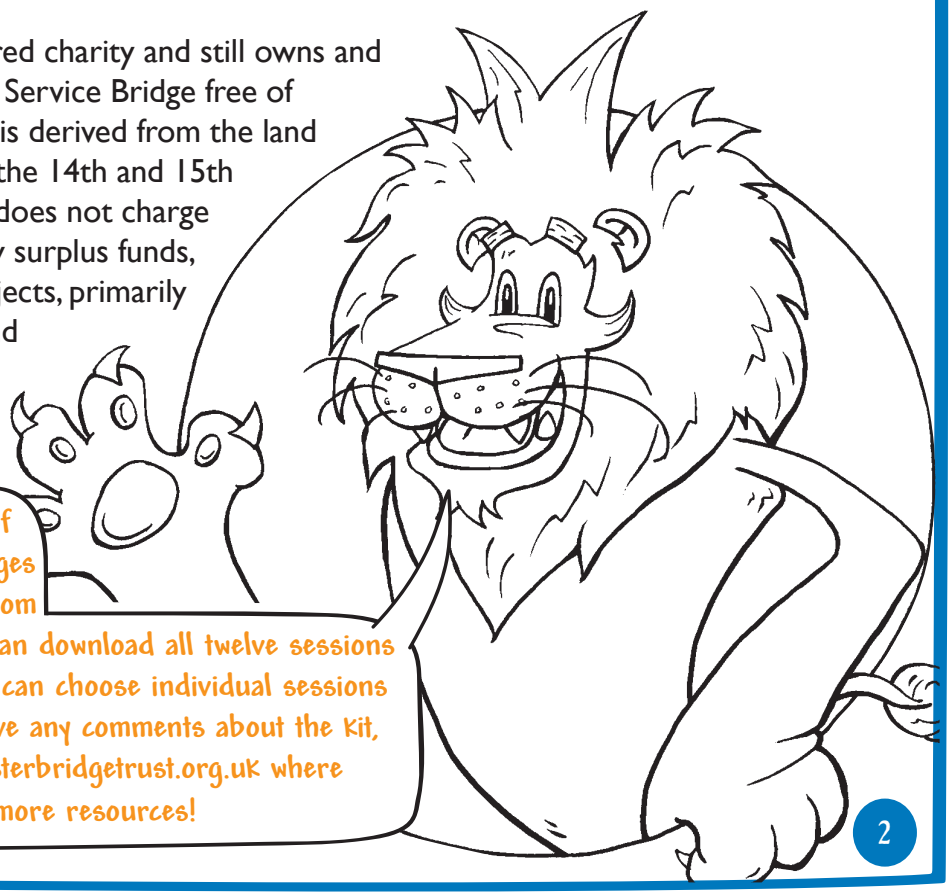

Hello! I'm Langdon the Lion, guardian of Rochester Bridge. Welcome to my Bridges Education Kit, which was downloaded from www.rochesterbridgetrust.org.uk. You can download all twelve sessions along with presentation slides, or you can choose individual sessions with supporting worksheets. If you have any comments about the kit, please visit our website www.rochesterbridgetrust.org.uk where you will also find lots more resources!

Session 6 – Truss Bridges (Part 2)

Aims & Objectives

- *To explore the* **Truss Bridge** *in more detail*
- *To learn the terminology of* **Truss Bridges**

You Will Need:

- ☐ HANDOUT: Truss Bridge Terminology
- ☐ Internet access
- ☐ HANDOUT: Describing Truss Bridges
- ☐ HANDOUT: Can You Describe These Truss Bridges?

Context

Once civil engineers learnt that triangle shapes could be used to build strong **Truss Bridges**, *they experimented with lots of different designs.*

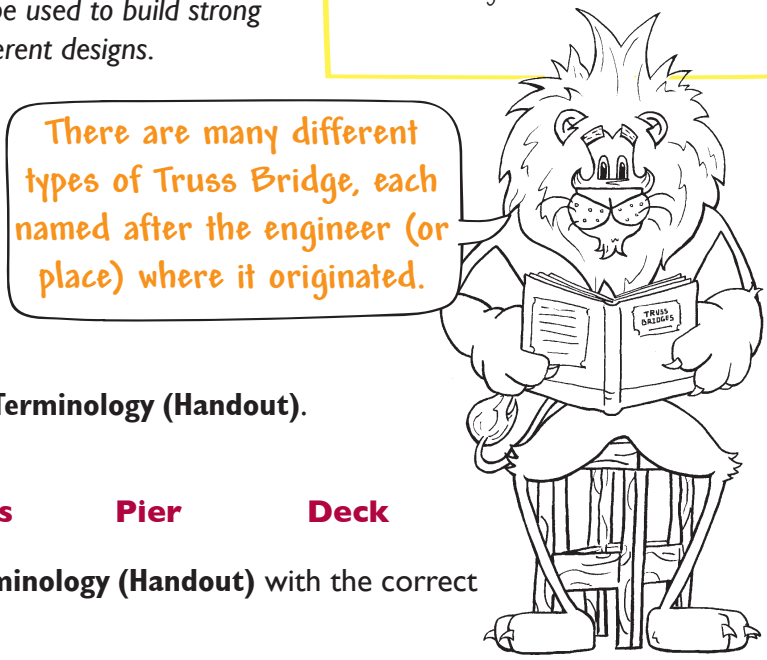

Session Activities

1. The Language of Bridges

- Use **Truss Bridge Terminology (Handout)** to learn the names of the different parts of a **Truss Bridge**.
  - Give out blank copies of **Truss Bridge Terminology (Handout)**.
  - As a group, identify:

Abutment **Span** **Truss** **Pier** **Deck**

- Help students to fill in **Truss Bridge Terminology (Handout)** with the correct terms.

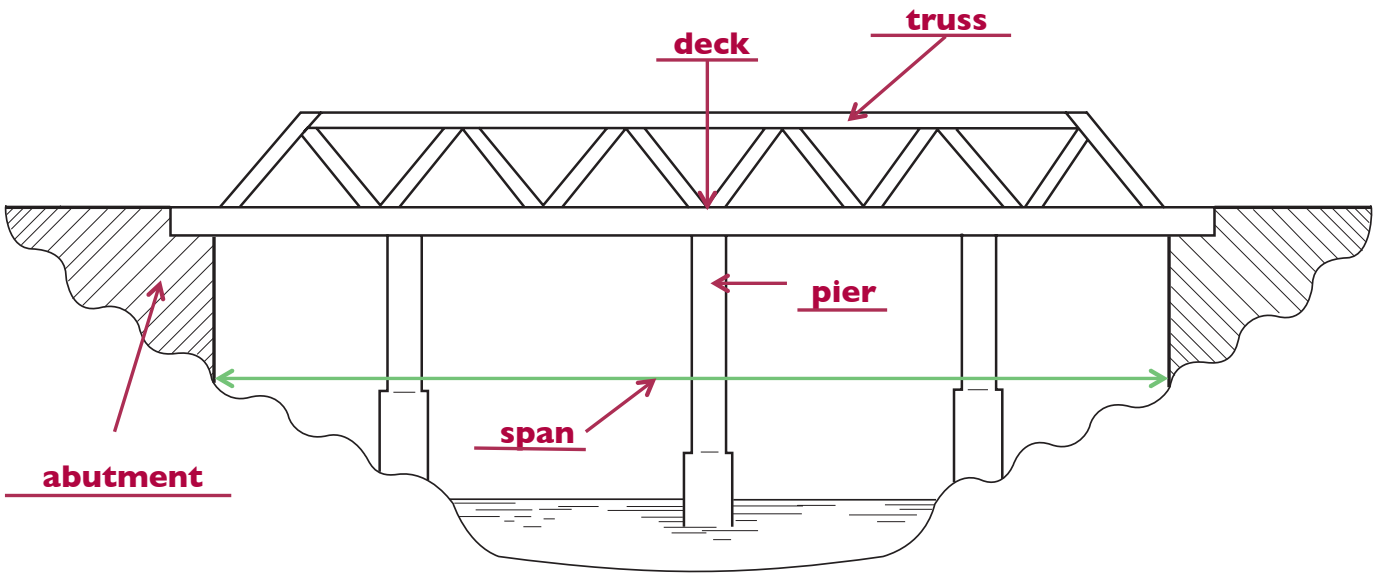

2. Types of Truss Bridge

- Almost every combination of triangles was used in **Truss Bridges** from 1800 to 1900. Look at **Describing Truss Bridges (Handout)** for lots of examples. Each design has a name, usually after the first person to build that shape, or the place where it was first tried or sometimes using a description of the shape itself.
- The way engineers describe **Truss Bridges** is based on the arrangement of the parts of the **truss**. Discuss **Describing Truss Bridges (Handout)** to understand the names for the main types.
- Use **Can You Describe These Truss Bridges? (Handout)** to try to identify the type of truss used in some real bridges using the proper terminology.
- Using the internet, find some pictures of other **Truss Bridges** around the world and see if you can identify their type.

Answers:

A - **Baltimore Truss**
B - **Warren Truss**
C - **Pratt Truss**
D - **Warren Truss**

Challenge your students to spot Truss Bridges in your area. Once you start looking for them, it's surprising how many you'll see!

Challenge

Ask the students to spot a **Truss Bridge** in their local area. Take a photo and identify the parts using the correct terminology. What type of **Truss Bridge** is it?

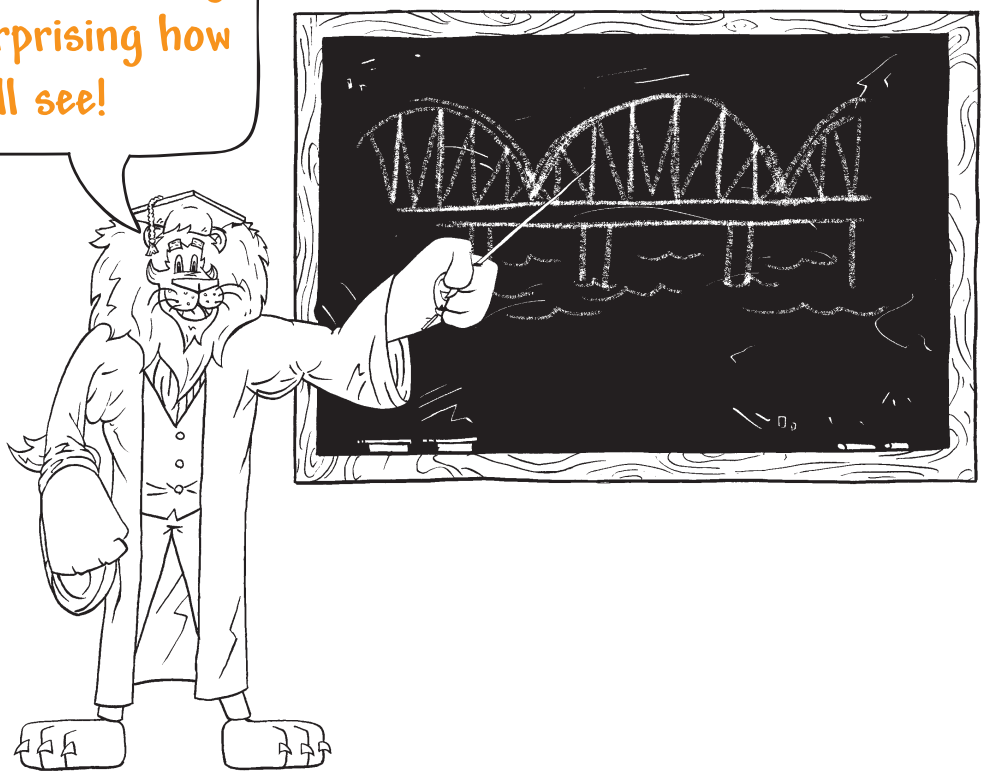

Describing Truss Bridges (Handout)

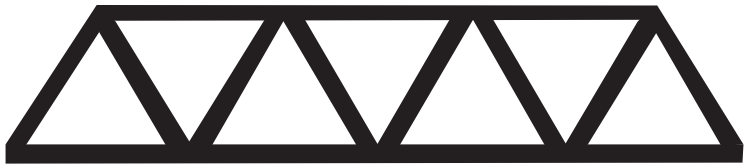

Warren Truss

One of the most common types of truss. Made up of equilateral triangles. Patented in 1848 by its designer James Warren.

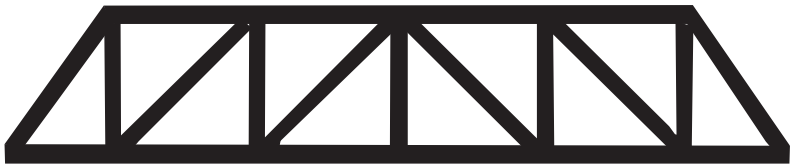

Howe Truss

The diagonal members slope up towards the centre and are in compression. The vertical parts are in tension. Patented in 1840 by millwright William Howe.

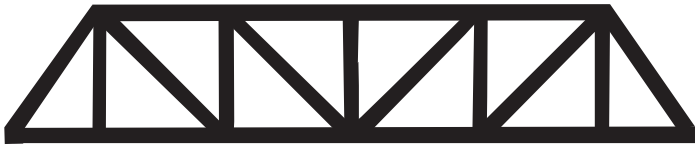

Pratt Truss

The opposite of a Howe Truss. The diagonal members slope down towards the centre. The vertical parts are in compression. This type of truss can be used for spans up to about 75 metres and is very common in the US. Patented in 1844 by Thomas and Caleb Pratt.

Baltimore Truss

This is based on the Pratt Truss but with additional bracing in the lower section of the truss to make it stronger. This type of truss was developed in the 1870s and is mainly used for train bridges which need to be very strong.

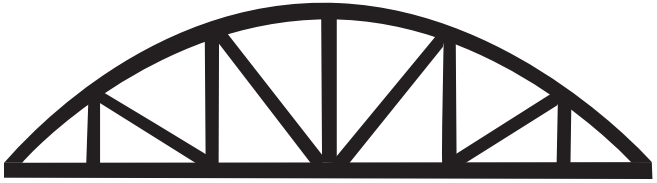

Bowstring Truss

This is the form of truss used on Rochester Old Bridge. Although it is a similar shape to an arch bridge it is doesn't work in the same way. See the similarities with the Pratt Truss. Patented in 1841 by Squire Whipple.

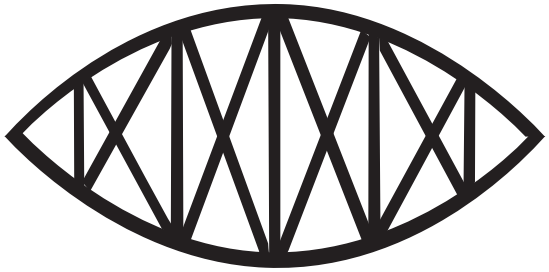

Lenticular Truss

The name of this bridge comes from its shape which is like a lens you might find in a telescope or the human eye. The most famous lenticular truss bridge is the Royal Albert Bridge near Plymouth which was designed by Isambard Kingdom Brunel and opened in 1859.

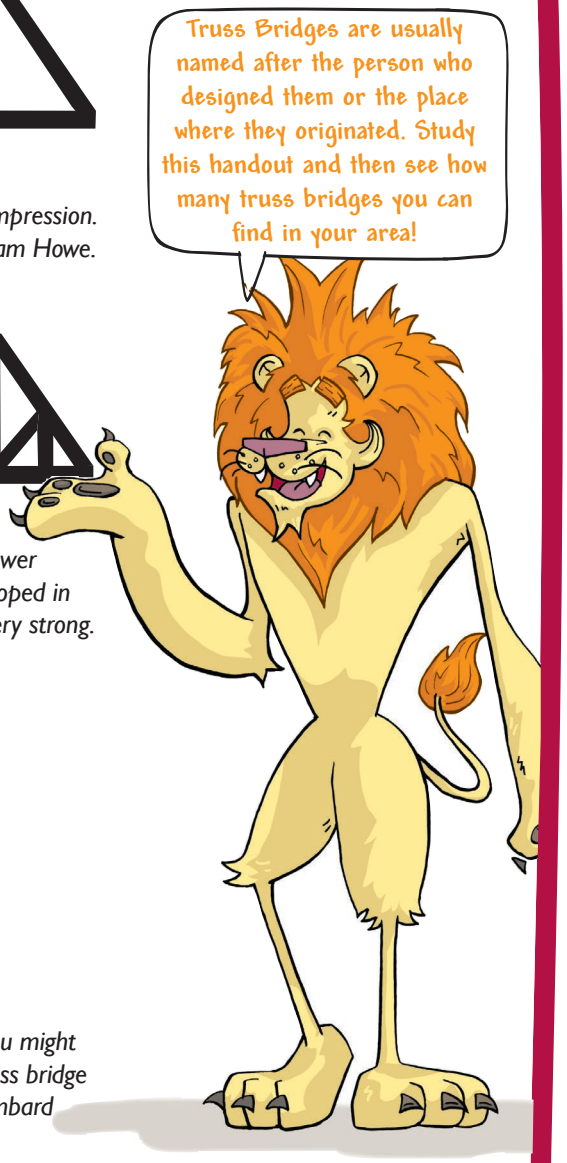

SESSION 6

Can You Describe These Truss Bridges? (Handout)

A

Ontario, Canada

B

Massachusetts, USA

C

Puente Tacuarembo, Uruguay

D

Sidcup, Kent

SESSION 6

Truss Bridge Terminology (Handout)

Label the parts of the bridge using the list of words below.

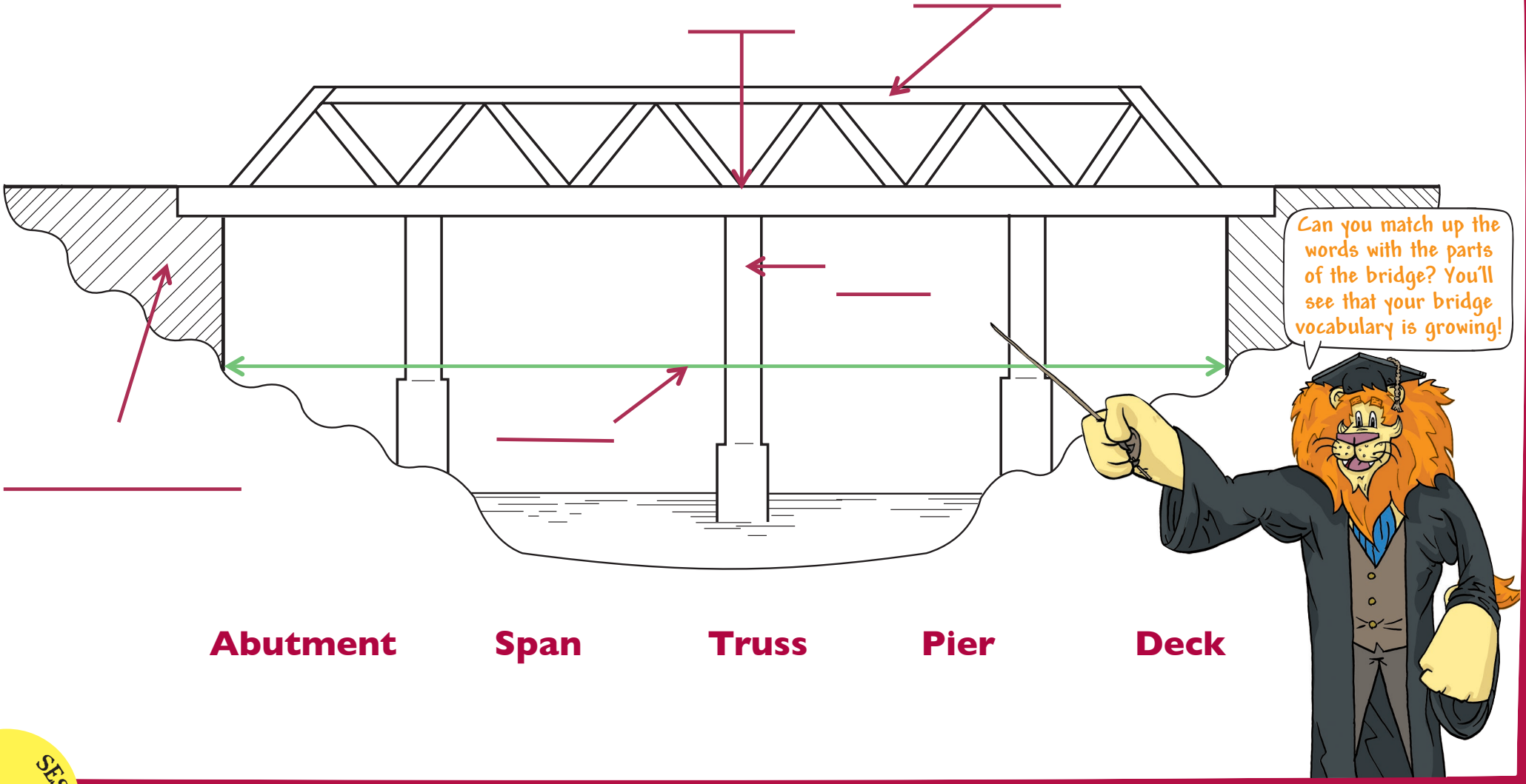

Abutment **Span** **Truss** **Pier** **Deck**

SESSION 6