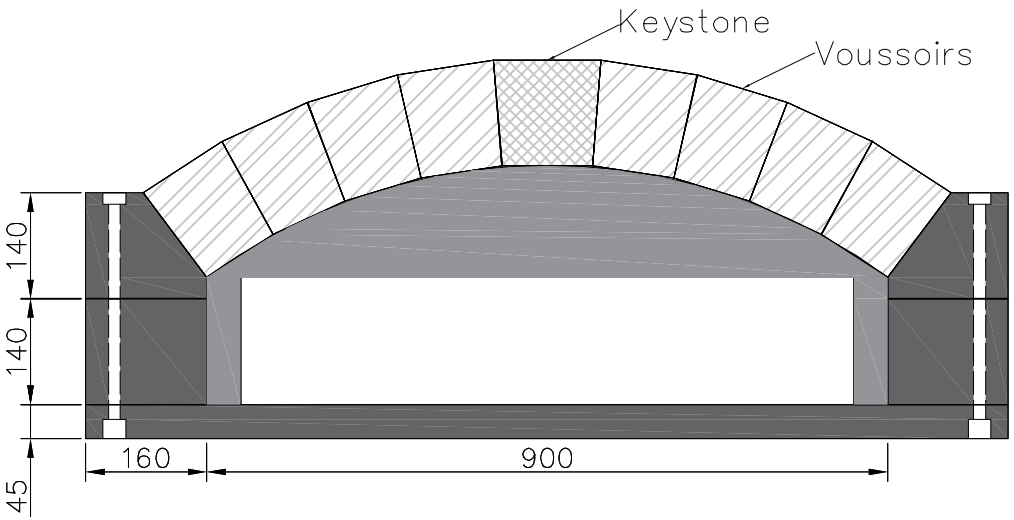


General Arrangements

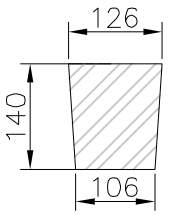


8 Voussoirs

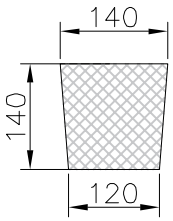


1 Keystone

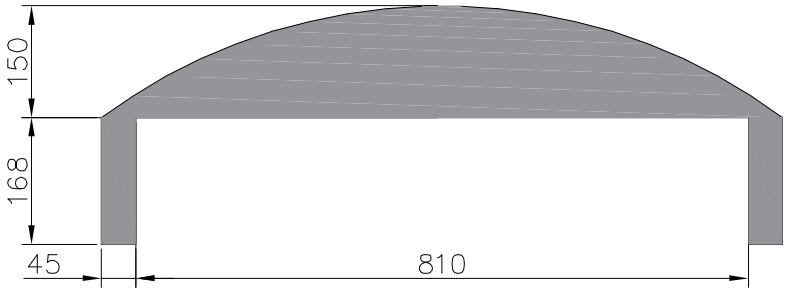


Temporary Arch Support

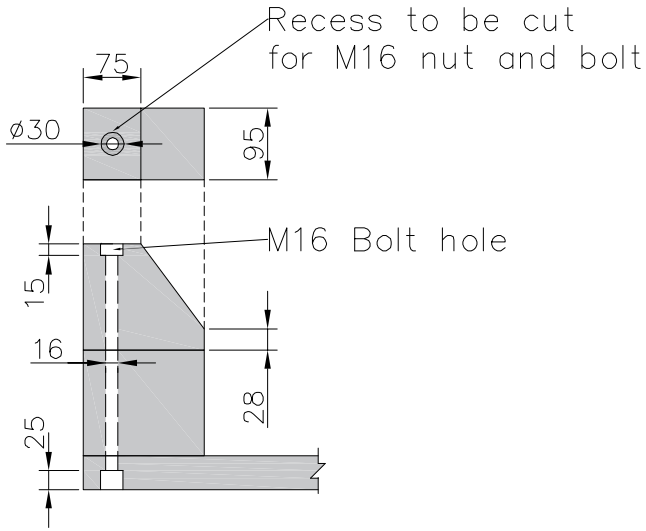


Abutment

Notes

1. 2 x 300mm M16 Bolt with nut are required to attach the abutment components together.
2. All components to have a thickness of 95mm.
3. All components are made from solid timber.
4. The radius of the arc in the Temporary Arch Support is 750mm.

ROCHESTER BRIDGE TRUST

Project

ROCHESTER BRIDGE TRUST

Title

ARCH BRIDGE